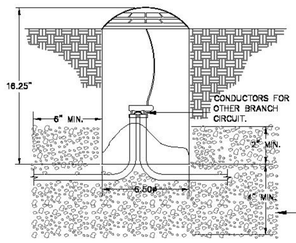

NOTES:

1. REFERENCE LUMINAIRE SCHEDULE FOR LUMINAIRE PART NUMBERS.
2. ALL CONNECTIONS TO FIXTURE TO BE MADE WATER TIGHT. REF. ELECTRICAL SPECIFICATIONS.
3. REFERENCE CONTROL DIAGRAM FOR METHOD OF CONTROL.
4. E.C. IS TO PROVIDE ALL FIXTURES WITH STAINLESS STEEL TAMPER PROOF HARDWARE.
5. E.C. TO SPOT LIGHT FIXTURE AS SHOWN.
6. E.C. TO PROVIDE ALL NECESSARY MOUNTING AND INSTALLATION HARDWARE. E.C. TO PROVIDE A COMPLETE OPERATING SYSTEM.

FIXTURE "Z" - DOME LIGHT DETAIL (1 / E5B)

NO SCALE

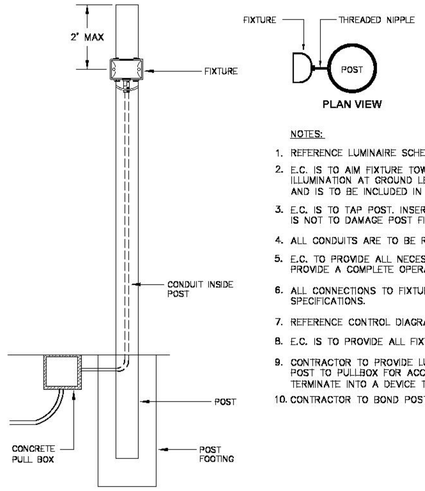

NOTES:

1. REFERENCE LUMINAIRE SCHEDULE FOR LUMINAIRE PART NUMBERS.
2. E.C. IS TO AIM FIXTURE TOWARDS SIDEWALK DIRECTLY INFRONT FOR MAXIMUM ILLUMINATION AT GROUND LEVEL, 2–4 FTC. NIGHT TIME AIMING WILL BE REQUIRED AND IS TO BE INCLUDED IN E.C.'S BID.
3. E.C. IS TO TAP POST. INSERT NIPPLE AND COUPLE TO LUMINAIRE AS SHOWN. TAP IS NOT TO DAMAGE POST FINISH.
4. ALL CONDUITS ARE TO BE RUN INSIDE OF STEEL POST.
5. E.C. TO PROVIDE ALL NECESSARY MOUNTING AND INSTALLATION HARDWARE. E.C. TO PROVIDE A COMPLETE OPERATING SYSTEM UPON COMPLETION.
6. ALL CONNECTIONS TO FIXTURE TO BE MADE WATER TIGHT. REF. ELECTRICAL SPECIFICATIONS.
7. REFERENCE CONTROL DIAGRAM FOR METHOD OF CONTROL.
8. E.C. IS TO PROVIDE ALL FIXTURES WITH STAINLESS STEEL TAMPER PROOF HARDWARE.
9. CONTRACTOR TO PROVIDE LUMINAIRE WITH PIGTAIL THAT WILL RUN DOWN THROUGH POST TO PULLBOX FOR ACCESSIBLE SPLICE. CONDUCTORS TO BE #12 THWN, OR TERMINATE INTO A DEVICE THAT PROTECTS THEM AT THEIR AMPACITY. 25' TAP RULE.
10. CONTRACTOR TO BOND POST TO BRANCH CIRCUIT GROUNDING CONDUCTOR.

COLUMN/POST LIGHTS - FIXTURE "M" (4 / E5B)

NO SCALE

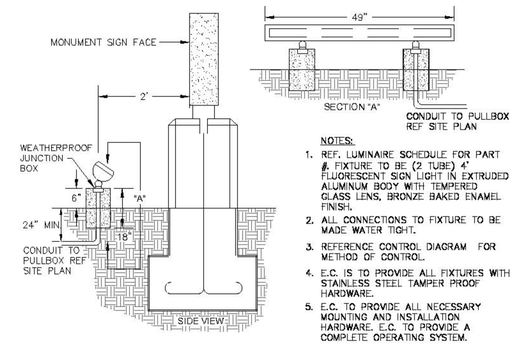

NOTES:

1. REF. LUMINAIRE SCHEDULE FOR PART #. FIXTURE TO BE (2 TUBE) 4' FLUORESCENT SIGN LIGHT IN EXTRUDED ALUMINUM BODY WITH TEMPERED GLASS LENS, BRONZE BAKED ENAMEL FINISH.
2. ALL CONNECTIONS TO FIXTURE TO BE MADE WATER TIGHT.
3. REFERENCE CONTROL DIAGRAM FOR METHOD OF CONTROL.
4. E.C. IS TO PROVIDE ALL FIXTURES WITH STAINLESS STEEL TAMPER PROOF HARDWARE.
5. E.C. TO PROVIDE ALL NECESSARY MOUNTING AND INSTALLATION HARDWARE. E.C. TO PROVIDE A COMPLETE OPERATING SYSTEM.

SIGN LIGHT "R" DETAIL (6 / E5B)

NO SCALE

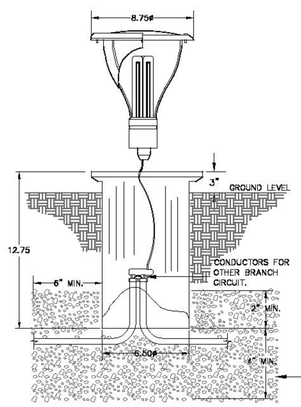

NOTES:

1. REFERENCE LUMINAIRE SCHEDULE FOR LUMINAIRE PART NUMBERS.
2. ALL CONNECTIONS TO FIXTURE TO BE MADE WATER TIGHT. REF. ELECTRICAL SPECIFICATIONS.
3. REFERENCE CONTROL DIAGRAM FOR METHOD OF CONTROL.
4. PROVIDE WITH INTERNAL HONEYCOMB LOUVER.
5. E.C. IS TO PROVIDE ALL FIXTURES WITH STAINLESS STEEL TAMPER PROOF HARDWARE.
6. E.C. TO SPOT LIGHT FIXTURE 3"–5" OUT FROM WALL BEING LIT.
7. E.C. TO PROVIDE ALL NECESSARY MOUNTING AND INSTALLATION HARDWARE. E.C. TO PROVIDE A COMPLETE OPERATING SYSTEM.

FIXTURE "Q" & "X" - WELL LIGHT DETAIL (2 / E5B)

NO SCALE

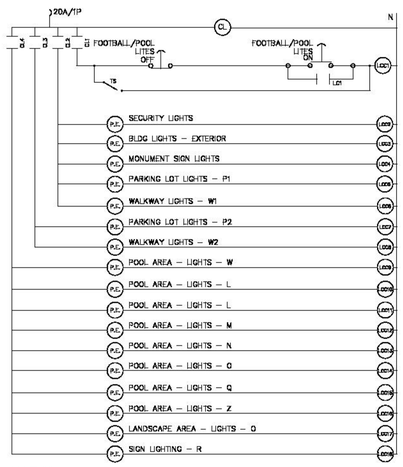

NOTES:

1. ALL CONTROL WIRING TO BE #12THWN COPPER IN 1/2"C WHERE EXPOSED.
2. RATING OF CONTACTORS TO MATCH CIRCUIT BREAKERS.
3. MUSCO WILL FURNISH AND INSTALL MUSCO CONTROL LINK AND LIGHTING CONTACTORS. E.C. IS TO PROVIDE PUSHBUTTONS AND ALL OTHER CONTROLS SHOWN ON THIS DETAIL. PUSHBUTTONS TO BE MOUNTED ON SURFACE OF ENCLOSURE SEPARATE FROM LIVE EXPOSED ELECTRICAL PARTS. MUSCO CONTROL LINK TO BE LOCATED IN ELECTRICAL ROOM ADJACENT TO SWITCHGEAR.
4. E.C. IS TO FURNISH, INSTALL AND LABEL, ON & OFF PUSH BUTTONS AND TEST SWITCHES (TS). TEST SWITCH TO BE WEATHER PROOF SNAP SWITCH. THIS CONTROL EQUIPMENT IS BE MOUNTED INSIDE OF PROPOSED MUSCO LIGHTING CONTROL ENCLOSURE ADJACENT TO SWITCHGEAR.
5. E.C. IS TO PROVIDE ADDITIONAL (6) SPARE 30A LIGHTING CONTACTORS.

SYMBOLS:

- (TC) MUSCO CONTROL LINK.
- (LCC) LIGHTING CONTACTOR COIL.
- LC1 — LIGHTING CONTACT CONTROLLED BY LCC.
- SNAP SWITCH LABELED AND MOUNTED IN CONTROL ENCLOSURE.
- OFF — PUSH BUTTON MOMENTARY CONTACT. – REMOTE
- ON — PUSH BUTTON MOMENTARY CONTACT. – REMOTE

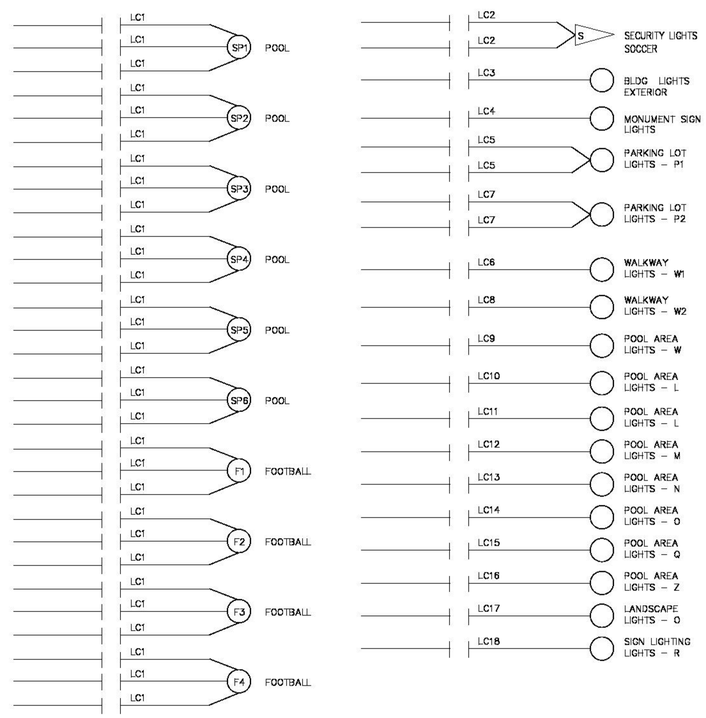

LIGHTING CONTROL DIAGRAM - SERVICE #3 (5 / E5B)

NO SCALE

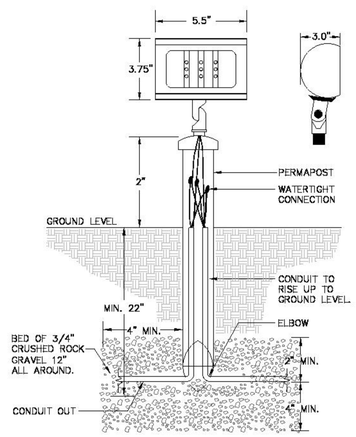

NOTES:

1. REF. LUMINAIRE SCHEDULE FOR EXACT PART NUMBER.
2. FIXTURES WILL REQUIRE AIMING AFTER INSTALLATION.
3. ALL CONNECTIONS TO FIXTURE TO BE MADE WATER TIGHT. REF SPEC.
4. PROVIDE WITH PHOTOELECTRIC CONTROL. REF CONTROL DIAGRAM
5. CONTRACTOR TO PROVIDE NECESSARY HARDWARE TO PLACE FIXTURE IN GROUND.
6. FINISH – DARK BRONZE
7. E.C. IS TO FILL CONDUITS WITH WATER RESISTANT FOAM AFTER FINAL WATERTIGHT CONNECTION HAS BEEN MADE. E.C. IS TO FOLLOW ALL CEC 2007 CODE REQUIREMENTS

FIXTURE "O" - FLOODLIGHT DETAIL (3 / E5B)

NO SCALE

CITY OF SAN CLEMENTE

Department of Beaches, Parks & Recreation

AVENIDA VISTA HERMOSA / AVENIDA LA PATA PARK (PHASE-1B)

ELECTRICAL DETAILS

Scale: AS SHOWN

Drawing Number: E-5B

Sheet Number: Sheet 116 of 178

APPROVED BY:

Al Krug, Director of Beaches, Parks & Recreation — DATE

Bill Gameson, CITY ENGINEER — DATE

BENCH MARK:

BY/UNIT ELEV. = 249.887 DATUM= NGVD 29/1988 DOS ADJUSTED

SIGNATURE ON FILE

REVISION

NO.	DESCRIPTION	REVISED BY	APPROVED BY	DATE
#1	ADDED RR BUILDING TO SET	RM	JA	10/28/09

1-800-422-4133 DIGALERT

UNDERGROUND SERVICE ALERT OF SOUTHERN CALIFORNIA

ATTENTION IS DIRECTED TO THE POSSIBLE EXISTENCE OF UNDERGROUND FACILITIES WITHIN THE PROJECT AREA. THE LOCATIONS SHOWN ARE APPROXIMATE AND MUST BE VERIFIED PRIOR TO CONSTRUCTION. CONTACT UNDERGROUND SERVICE ALERT AT 1-800-422-4133 FOR FIELD LOCATION OF UNDERGROUND FACILITIES.

BEFORE YOU DIG, CALL TOLL FREE 1-800-422-4133 UNDERGROUND SERVICE ALERT

PLANS PREPARED BY:
Dream Engineering Inc.
Consulting Electrical Engineers

Dream Engineering Inc.
Consulting Electrical & Mechanical Engineers
Providing Excellent Service Since 1961
California • Arizona • Nevada • Texas
15490 Civic Drive
Suite 102
Victorville, CA 92392
V: 760.245.9997
F: 760.245.4884
www.dreamengineering.com
email: info@dreamengineering.com

DESIGNED BY: — DATE:
DRAWN BY: JH — DATE: 02/11/06
CHECKED BY: — DATE:
UNDER THE SUPERVISION OF: — DATE:
JUAN A. ARAUJO EE 15537 — 10/16/2008

REGISTERED PROFESSIONAL ENGINEER — JUAN A. ARAUJO — No. E 15537 — EXP. DEC. 31 2008 — ELECTRICAL — STATE OF CALIFORNIA

BID SET

Dec 03, 2009 – 8:12am Server\Jrt\DRAWINGS\La Pata Hermosa Park\Entire Park\esset28.dwg