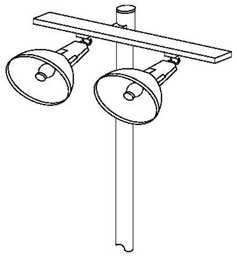

REF. MUSCO SHEETS FOR ADDITIONAL INFO.

2P LUMINAIRE DETAIL (1 / E4)

NO SCALE

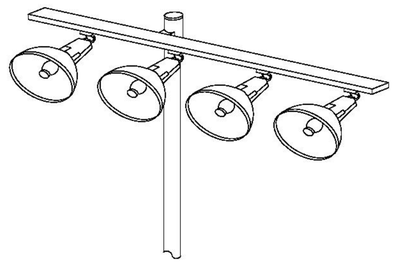

REF. MUSCO SHEETS FOR ADDITIONAL INFO.

4P LUMINAIRE DETAIL (2 / E4)

NO SCALE

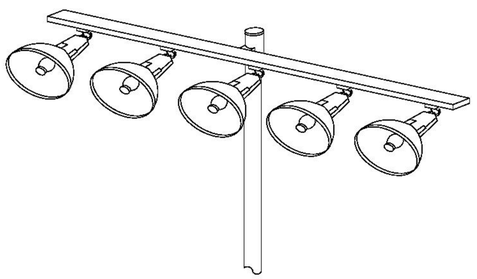

REF. MUSCO SHEETS FOR ADDITIONAL INFO.

5P LUMINAIRE DETAIL (3 / E4)

NO SCALE

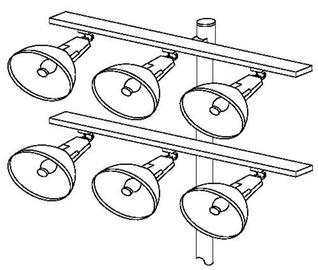

REF. MUSCO SHEETS FOR ADDITIONAL INFO.

6P LUMINAIRE DETAIL (4 / E4)

NO SCALE

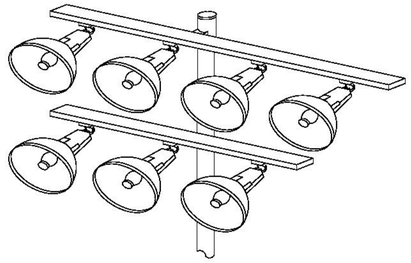

REF. MUSCO SHEETS FOR ADDITIONAL INFO.

7P LUMINAIRE DETAIL (5 / E4)

NO SCALE

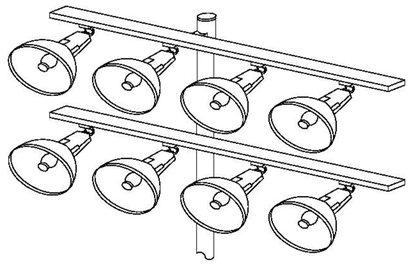

REF. MUSCO SHEETS FOR ADDITIONAL INFO.

8P LUMINAIRE DETAIL (6 / E4)

NO SCALE

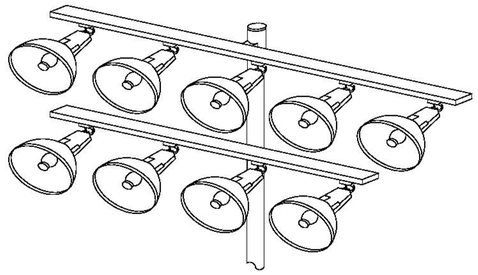

REF. MUSCO SHEETS FOR ADDITIONAL INFO.

9P LUMINAIRE DETAIL (7 / E4)

NO SCALE

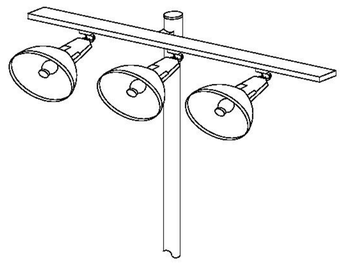

REF. MUSCO SHEETS FOR ADDITIONAL INFO.

3P LUMINAIRE DETAIL (12 / E4)

NO SCALE

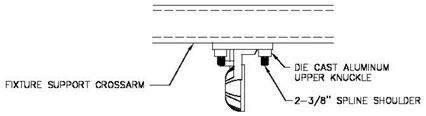

REF. MUSCO SHEETS FOR ADDITIONAL INFO.

LUMINAIRE ATTACHMENT DETAIL (8 / E4)

NO SCALE

REF. MUSCO SHEETS FOR ADDITIONAL INFO.

TOP VIEW OF CROSS ARM (9 / E4)

NO SCALE

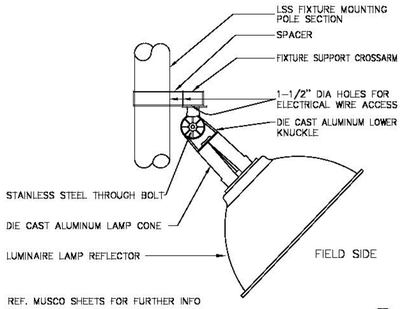

REF. MUSCO SHEETS FOR FURTHER INFO

LIGHT FIXTURE DETAIL (10 / E4)

NO SCALE

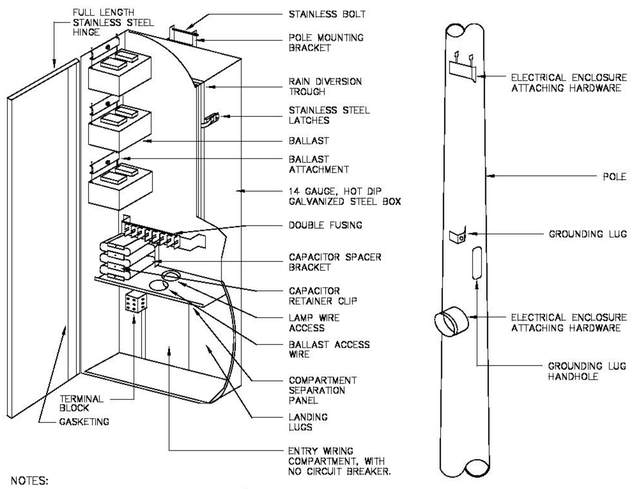

NOTES:
1. BALLAST TO MOUNT TO POLE REMOTE AT +14' ABOVE GROUND.
2. BALLAST BOX TO BE NEMA 3R GASKETED.

REF. MUSCO SHEETS FOR FURTHER INFO

BALLAST BOX DETAIL (11 / E4)

NO SCALE

CITY OF SAN CLEMENTE

Department of Beaches, Parks & Recreation

AVENIDA VISTA HERMOSA / AVENIDA LA PATA PARK (PHASE-1B)

SPORTS AREA LUMINAIRE DETAILS

Scale: **AS SHOWN**

Drawing Number: **E-4**

Sheet Number: Sheet 112 of 178

APPROVED BY:

Al Krug, Director of Beaches, Parks & Recreation — DATE

Bill Gameson, CITY ENGINEER — DATE

BENCH MARK:

BY/VGH ELEV. = 249.88' DATUM= NGVD 29/1988 DOS ADJUSTED

BEGINNING AT STANDARD CITY SURVEY TIE TO BE ESTABLISHED AT THE INTERSECTION OF AVENIDA PICO AND AVENIDA LA PATA, 60' EASTERLY OF CENTERLINE OF AVENIDA PICO, 30' SOUTHERLY OF THE CENTERLINE OF AVENIDA LA PATA, IN THE SOUTHWEST CORNER OF A 4x17 CATCH BASIN, 1' BEHIND CURB FACE.

REVISION

NO.	DESCRIPTION	REVISED BY	APPROVED BY	DATE
1	ADDED RR BUILDING TO SET	RM	JA	10/28/09

1-800-422-4133
DIGALERT
UNDERGROUND SERVICE ALERT OF NORTHERN CALIFORNIA
ATTENTION IS DIRECTED TO THE POSSIBLE EXISTENCE OF UNDERGROUND FACILITIES WHICH MAY BE ENCOUNTERED DURING CONSTRUCTION. THIS PLAN DOES NOT DEPICT ALL UNDERGROUND FACILITIES. THE CONTRACTOR SHALL CONTACT UNDERGROUND SERVICE ALERT AT 1-800-422-4133 BEFORE DIGGING.

Dream Engineering Inc.
Consulting Electrical & Mechanical Engineers
Providing Excellent Service Since 1981
California * Arizona * Nevada * Texas
15490 Civic Drive, Suite 101, Victorville, CA 92392
V: 760.245.9997
F: 760.245.8898
www.dreamengineering.com
email: info@dreamengineering.com

PLANS PREPARED BY:
Dream Engineering Inc.
Consulting Electrical Engineers

DESIGNED BY: DATE:
DRAWN BY: JH DATE: 02/11/06
CHECKED BY: DATE:
UNDER THE SUPERVISION OF: 10/15/2008
JUAN A. ARAUJO EE 16537 DATE

REGISTERED PROFESSIONAL ENGINEER — JUAN A. ARAUJO — E 16537 — EXP. DEC. 31 2009 — STATE OF CALIFORNIA — ELECTRICAL

BID SET

Dec. 03, 2009 - 8:13am\Server\Vh\X:\KAMINGS\La Pata Hermosa Park\Centre Park\Vaosie5.dwg